NORTH SOUTH UNIVERSITY

Department of Electrical and Computer Engineering

CSE323: Operating System Designs

Project Title	Smart Parking System

Team Members	Chadni Mandal Tanjim Subah Alam
Student Id	2013126042 2011837042
Section	04
Submitted to	Mosabber Uddin Ahmed (MUA3)
Submission date	08-06-2023

Objective:

1. Providing convenient parking solutions with availability of space showing on 20x4 LCD display.
2. The I2C LCD adapter module establishing the connection between a character LCD display and a microcontroller.
3. Using Arduino Uno microcontroller and Arduino Uno based source code to drive the system properly while understanding the concept of an operating system.
4. Using vibration sensor module to accommodate vehicles in their designated parking slots.
5. Preventing vehicles using more space than it can be provided with an automated barrier powered by a mini–Servo Motor SG-90.
6. Well-planned space optimization in the purpose of hassle-free parking.
7. Reduced traffic volume while ensuring time efficiency and secured parking.

Introduction:

In today's bustling urban environments, finding suitable parking spaces has become an ongoing challenge. To address this issue, we have developed the Smart Parking System, leveraging the power of the Arduino Uno microcontroller to provide an innovative solution. Our system incorporates vibration sensors that offer real-time guidance to drivers, enabling them to efficiently locate available parking spots while reducing search time and traffic congestion.

Our goal with the Smart Parking System is to optimize parking operations and enhance the overall parking experience for drivers. As part of this effort, we have integrated a character LCD display into our system. The character LCD display serves a crucial purpose by providing drivers with visual information, including parking spot availability and essential instructions, ensuring a seamless and user-friendly experience.

Through our advanced technologies and the Arduino Uno microcontroller, the Smart Parking System streamlines the parking process, saving drivers valuable time and contributing to a smoother traffic flow. The inclusion of the character LCD display further facilitates effective communication with drivers, empowering them with the necessary information to navigate and utilize parking spaces effectively.

Components:

1. Arduino Uno
2. 20×4 Character LCD Display
3. I2C LCD Adapter Module
4. Male Header
5. Female Header
6. Vibration Sensor Module x 6
7. Mini Servo Motor SG-90
8. Female DC Power Jack
9. 5v 2Amp Power Adapter
10. Wires

Circuit Diagram:

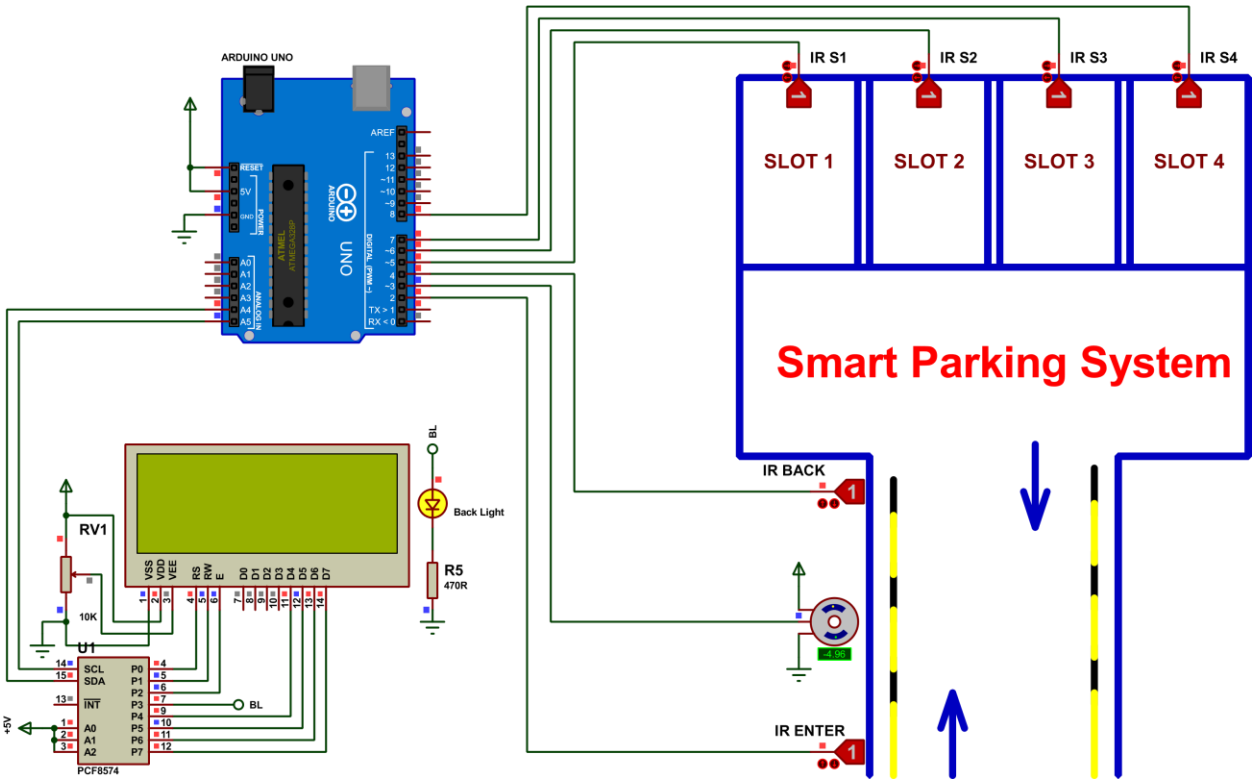

Source Code:

```
#include <Servo.h> //includes the servo library
#include <Wire.h>
#include <LiquidCrystal_I2C.h>
LiquidCrystal_I2C lcd(0x27, 2, 1, 0, 4, 5, 6, 7, 3, POSITIVE);

Servo myservo;

#define ir_enter 2
#define ir_back  4

#define ir_car1 5
#define ir_car2 6
#define ir_car3 7
#define ir_car4 8


int S1=0, S2=0, S3=0, S4=0;
int flag1=0, flag2=0;

int slot = 4;

void setup(){
Serial.begin(9600);

pinMode(ir_car1, INPUT);
pinMode(ir_car2, INPUT);
pinMode(ir_car3, INPUT);
pinMode(ir_car4, INPUT);


pinMode(ir_enter, INPUT);
pinMode(ir_back, INPUT);

myservo.attach(3);
myservo.write(90);

lcd.begin(20, 4);
lcd.setCursor (0,1);
lcd.print("  Smart  Parking  ");
lcd.setCursor (0,2);
lcd.print("       System     ");
delay (2000);
```

```
lcd.clear();

Read_Sensor();

int total = S1+S2+S3+S4;
    slot = slot-total;

}

void loop(){

Read_Sensor();

lcd.setCursor (0,0);
lcd.print("  Available Slot: ");
lcd.print(slot);
lcd.print("    ");

lcd.setCursor (0,1);
if(S1==1){lcd.print("S1:Full ");}
     else{lcd.print("S1:Empty");}

lcd.setCursor (10,1);
if(S2==1){lcd.print("S2:Full ");}
     else{lcd.print("S2:Empty");}

lcd.setCursor (0,3);
if(S3==1){lcd.print("S3:Full ");}
     else{lcd.print("S3:Empty");}

lcd.setCursor (10,3);
if(S4==1){lcd.print("S4:Full ");}
     else{lcd.print("S4:Empty");}



if(digitalRead (ir_enter) == 0 && flag1==0){
if(slot>0){flag1=1;
if(flag2==0){myservo.write(180); slot = slot-1;}
}
else
{
lcd.setCursor (0,0);
lcd.print(" Sorry! Parking Full ");
delay(1500);
```

```
}
}

if(digitalRead (ir_back) == 0 && flag2==0){flag2=1;
if(flag1==0){myservo.write(180); slot = slot+1;}
}

if(flag1==1 && flag2==1){
delay (1000);
myservo.write(90);
flag1=0, flag2=0;
}

delay(1);
}

void Read_Sensor(){
S1=0, S2=0, S3=0, S4=0;

if(digitalRead(ir_car1) == 0){S1=1;}
if(digitalRead(ir_car2) == 0){S2=1;}
if(digitalRead(ir_car3) == 0){S3=1;}
if(digitalRead(ir_car4) == 0){S4=1;}

}
```

Description:

In the development of the Smart Parking system, we incorporated various components to ensure efficient parking management. These components included a character LCD display, an I2C LCD adapter, a mini servo motor SG-90, and six vibration sensor modules.
To effectively monitor parking occupancy, we strategically placed the six vibration sensors at each parking spot, the entry point before the barrier, and after the vehicle passes through the gate. These sensors detect vehicle presence and provide real-time information about the availability of parking spaces.

To enable seamless operation and control, all components were connected to the Arduino Uno microcontroller. The Arduino Uno served as the central control unit, receiving input from the vibration sensors and making real-time decisions. It facilitated communication with the character LCD display through the I2C LCD adapter, allowing the microcontroller to send instructions and display relevant information to drivers about parking spot availability.

In managing the entry to the parking area, the mini servo motor SG-90 played a vital role. Controlled by the Arduino Uno, the motor operated a barrier that remained at a 180-degree position and moved to a 90-degree position to allow vehicles to enter when there were available parking spots. The Arduino Uno utilized the data from the vibration sensors to determine whether the barrier should be lifted or remain closed based on the occupancy status of the parking spaces.

Prior to implementing the project on the hardware, we designed and simulated the circuit using Proteus 8. This simulation allowed us to visualize the system's functionality and test its performance virtually. Subsequently, we wrote the necessary code in the Arduino IDE 2.1.0 to drive both the simulation and the final hardware implementation.

By integrating these components, conducting virtual simulations, and implementing the hardware with accurate programming, we successfully developed a Smart Parking system that optimizes parking management, provides real-time feedback to drivers, and enhances operational efficiency.

Conclusion:

In conclusion, Smart Parking System aimed to provide a practical solution to the challenging issue of traffic congestion in our daily lives. Throughout the project, we encountered several challenges, such as faulty wire connections and careful sensor attachment to the Arduino Uno. We also ensured the sensors accurately detected vehicle motion and displayed available slots on the LCD display. By implementing the code on the Arduino microcontroller and simulating the system in Proteus, we successfully developed a functional solution.

Furthermore, the Arduino Uno acted as the central control unit, akin to an operating system, in this project. It played a crucial role in overseeing various tasks and coordinating the functions of different components. The microcontroller received inputs from the vibration sensors, processed the data, and made real-time decisions regarding the barrier's status based on parking spot availability. Additionally, it communicated with the character LCD display through the I2C LCD adapter, managing the flow of information and ensuring proper data transfer and synchronization.

By overcoming challenges and utilizing the Arduino Uno as an operating system, we have contributed to a more efficient and convenient parking experience for drivers. This project serves as a stepping stone towards alleviating traffic congestion and creating smoother, more organized urban environments.